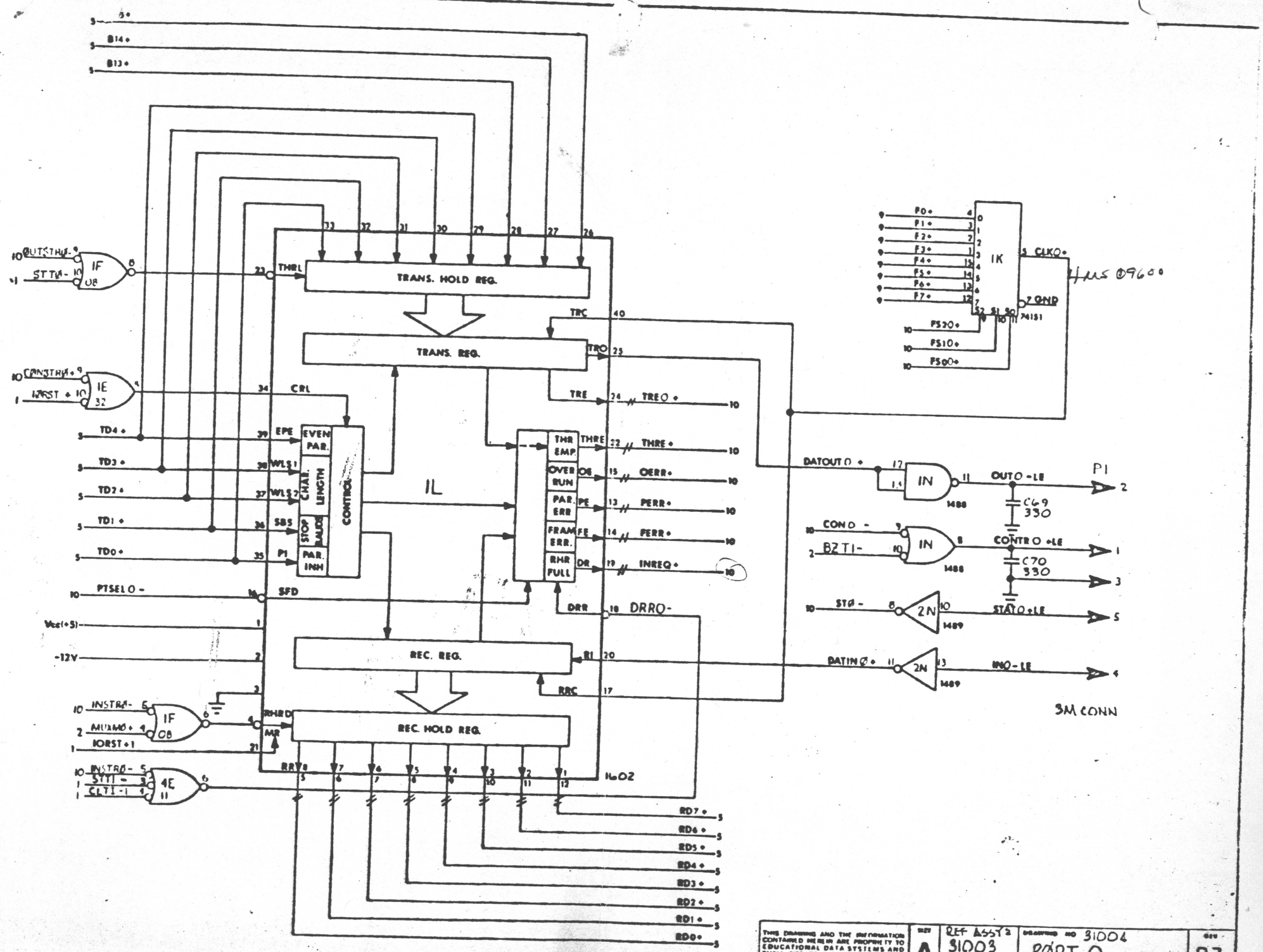

THIS DRAWING AND THE INFORMATION CONTAINED HEREIN ARE PROPERTY TO EDUCATIONAL DATA SYSTEMS AND SHALL NOT BE REPRODUCED, COPIED, USED OR DISCLOSED TO OTHERS WITHOUT THE PRIOR WRITTEN CONSENT OF

REV	REF ASSY'S	DRAWING NO	SIZE
A	31003 31013	31004 PØRT 0	B3

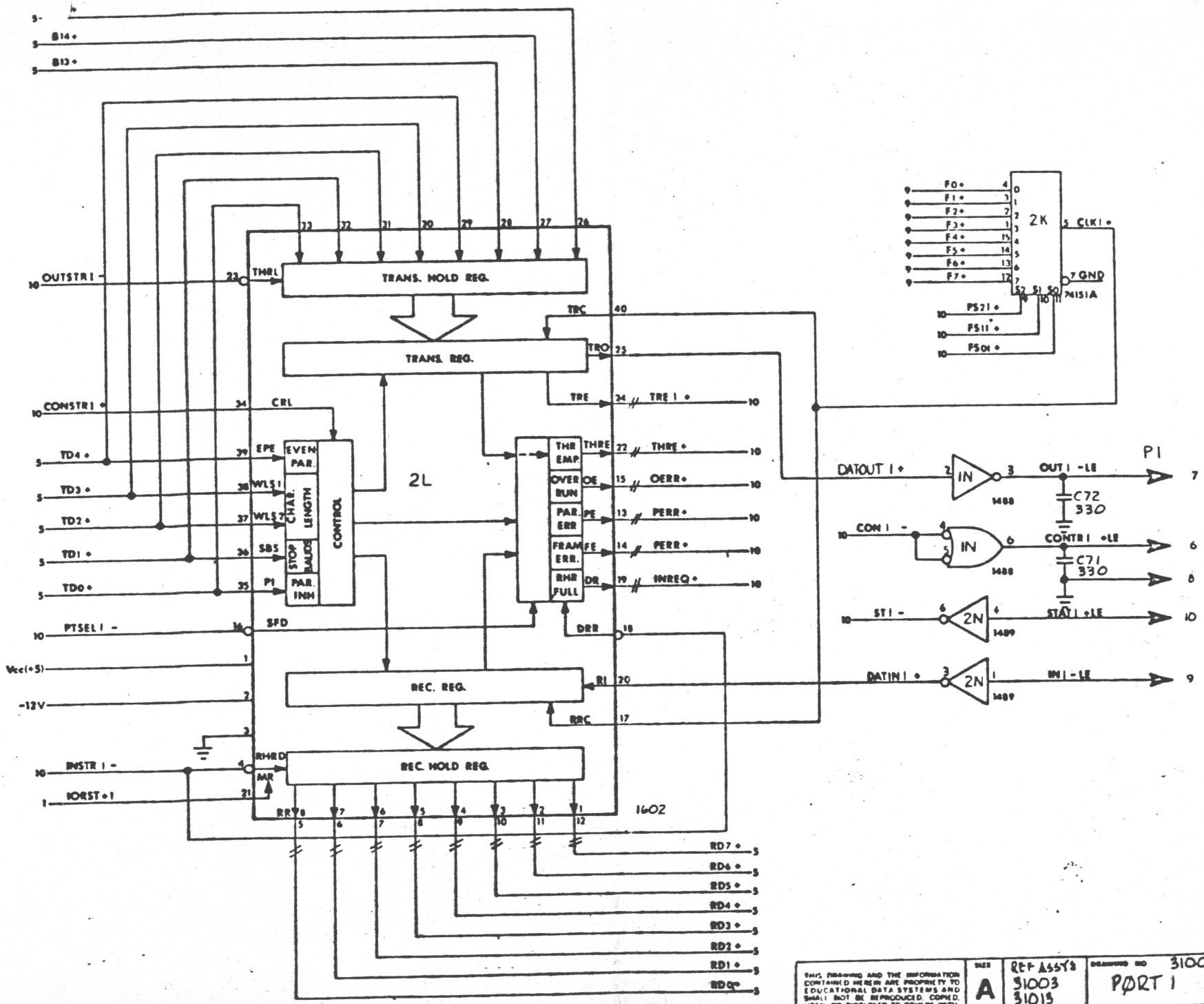

THIS DRAWING AND THE INFORMATION CONTAINED HEREIN ARE PROPRIETY TO EDUCATIONAL DATA SYSTEMS AND SHALL NOT BE REPRODUCED, COPIED, USED OR DISCLOSED TO OTHERS WITH OUT THE PRIOR WRITTEN CONSENT OF EDUCATIONAL DATA SYSTEMS

SIZE A	REF ASSY'S 31003 31013	DRAWING NO 31004 PORT 1	REV B3
SCALE NONE		SHEET 12 OF 19	

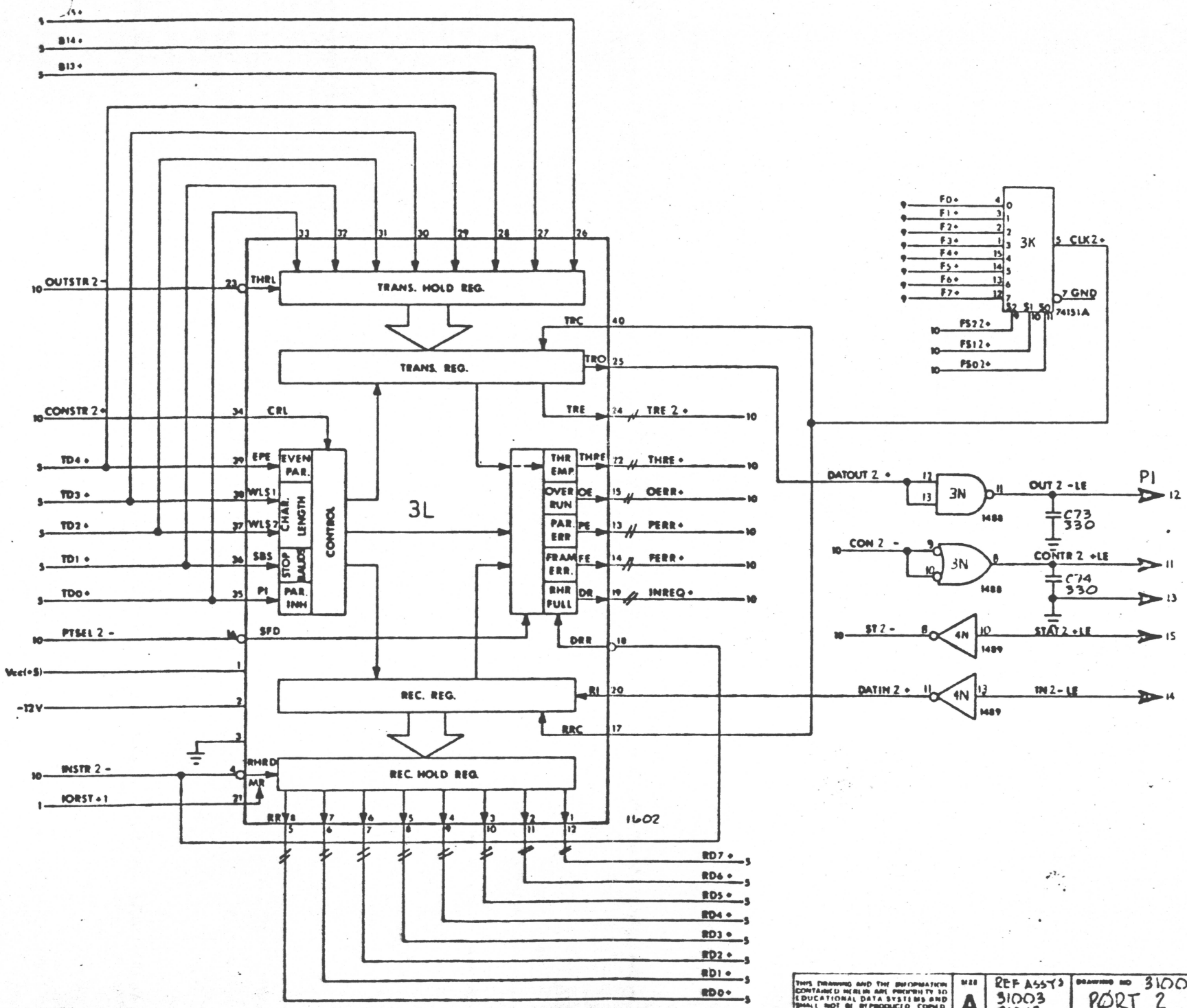

THIS DRAWING AND THE INFORMATION CONTAINED HEREIN ARE PROPRIETY TO EDUCATIONAL DATA SYSTEMS AND SHALL NOT BE REPRODUCED COPIED, USED OR DISCLOSED TO OTHERS WITHOUT THE PRIOR WRITTEN CONSENT OF EDUCATIONAL DATA SYSTEMS

SIZE	REF ASSYS	DRAWING NO	REV
A	31003 31013	31004 PORT 2	B3

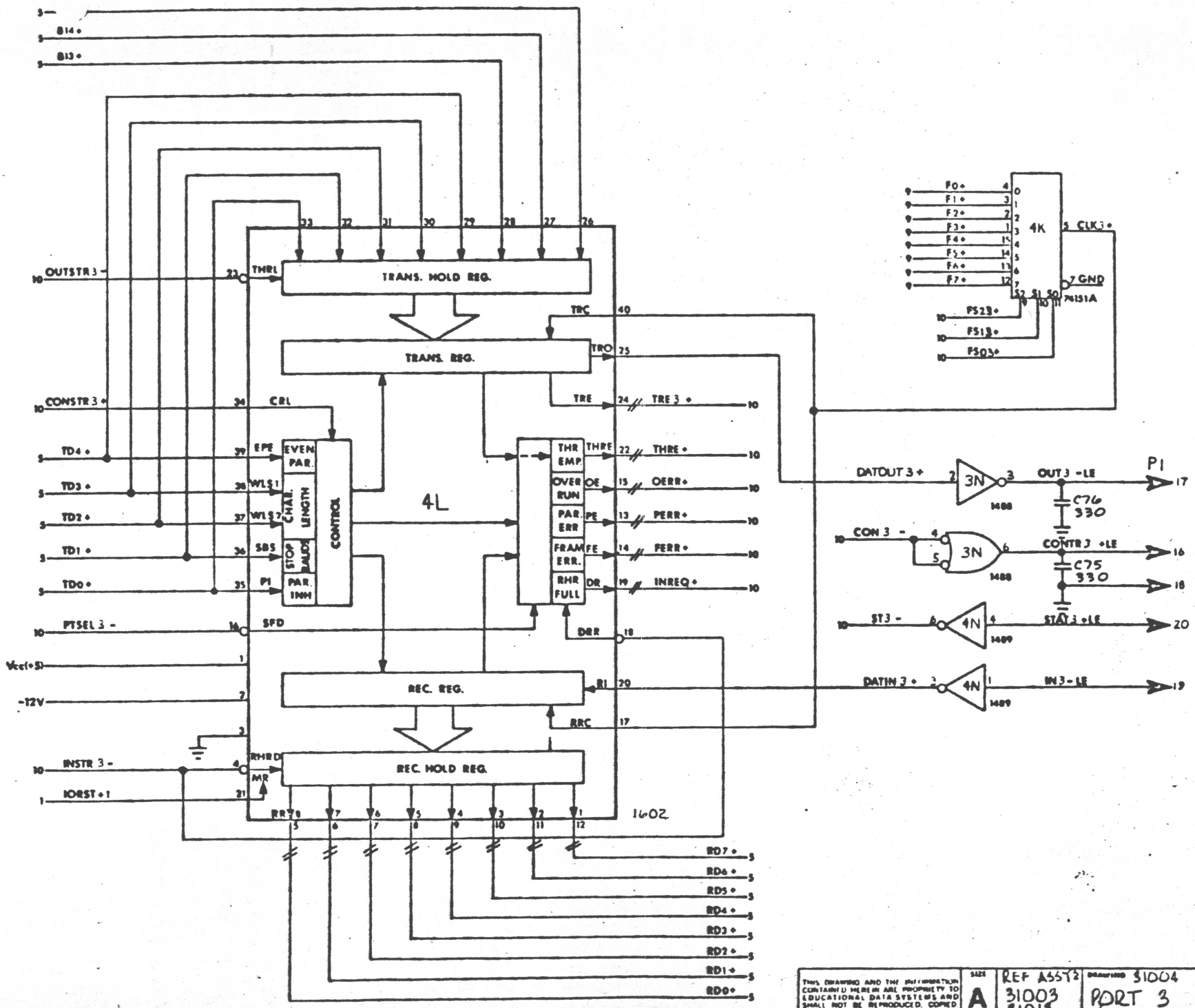
TRANS. HOLD REG.
TRANS. REG.
REC. REG.
REC. HOLD REG.
CONTROL
EVEN PAR.
CHAR. LENGTH
STOP BAUD
PAR. INH
THR EMP.
OVER RUN
PAR. ERR
FRAM ERR.
RHR FULL
4L
1602
4K
74151A
3N
1488
4N
1489
OUTSTR 3 -
CONSTR 3 +
TD4 +
TD3 +
TD2 +
TD1 +
TD0 +
PTSEL 3 -
Vcc(+5)
-12V
INSTR 3 -
IORST +1
TRE 3 +
THRE +
OERR +
PERR +
INREQ +
RD7 +
RD6 +
RD5 +
RD4 +
RD3 +
RD2 +
RD1 +
RD0 +
F0 +
F1 +
F2 +
F3 +
F4 +
F5 +
F6 +
F7 +
CLK3 +
GND
PS23 +
PS13 +
PS03 +
DATOUT 3 +
OUT 3 -LE
C76 330
CON 3 -
CONTR 3 +LE
C75 330
ST3 -
STAT 3 +LE
DATIN 3 +
IN 3 -LE
P1
REF ASSY 2
31003
31015
PORT 3
B3

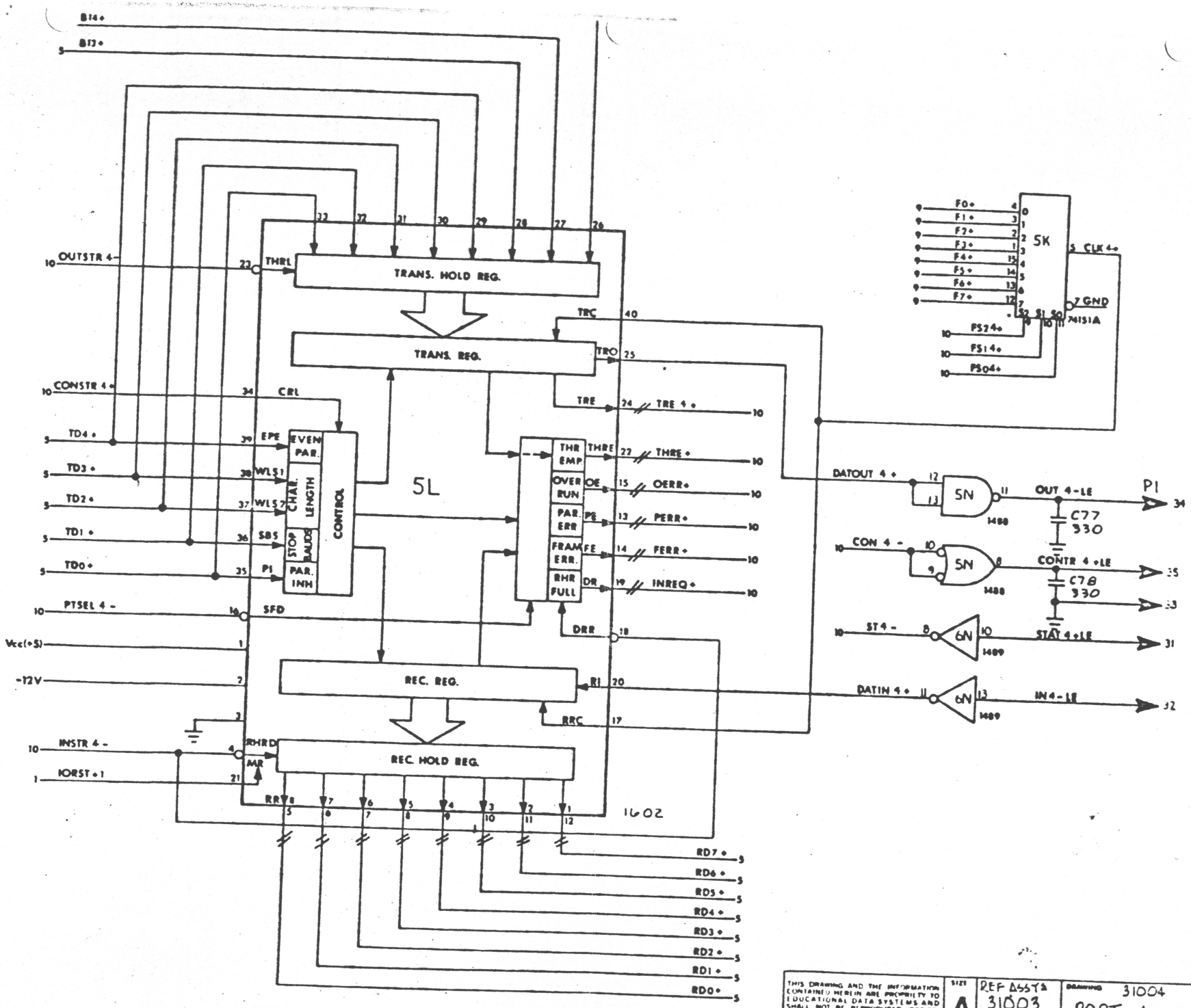

THIS DRAWING AND THE INFORMATION CONTAINED HEREIN ARE PROPRIETY TO EDUCATIONAL DATA SYSTEMS AND SHALL NOT BE REPRODUCED, COPIED, USED OR DISCLOSED TO OTHERS WITHOUT THE PRIOR WRITTEN CONSENT OF

SIZE	REF ASSTS	DRAWING	REV
A	31003 31013	31004 PORT 4	B3

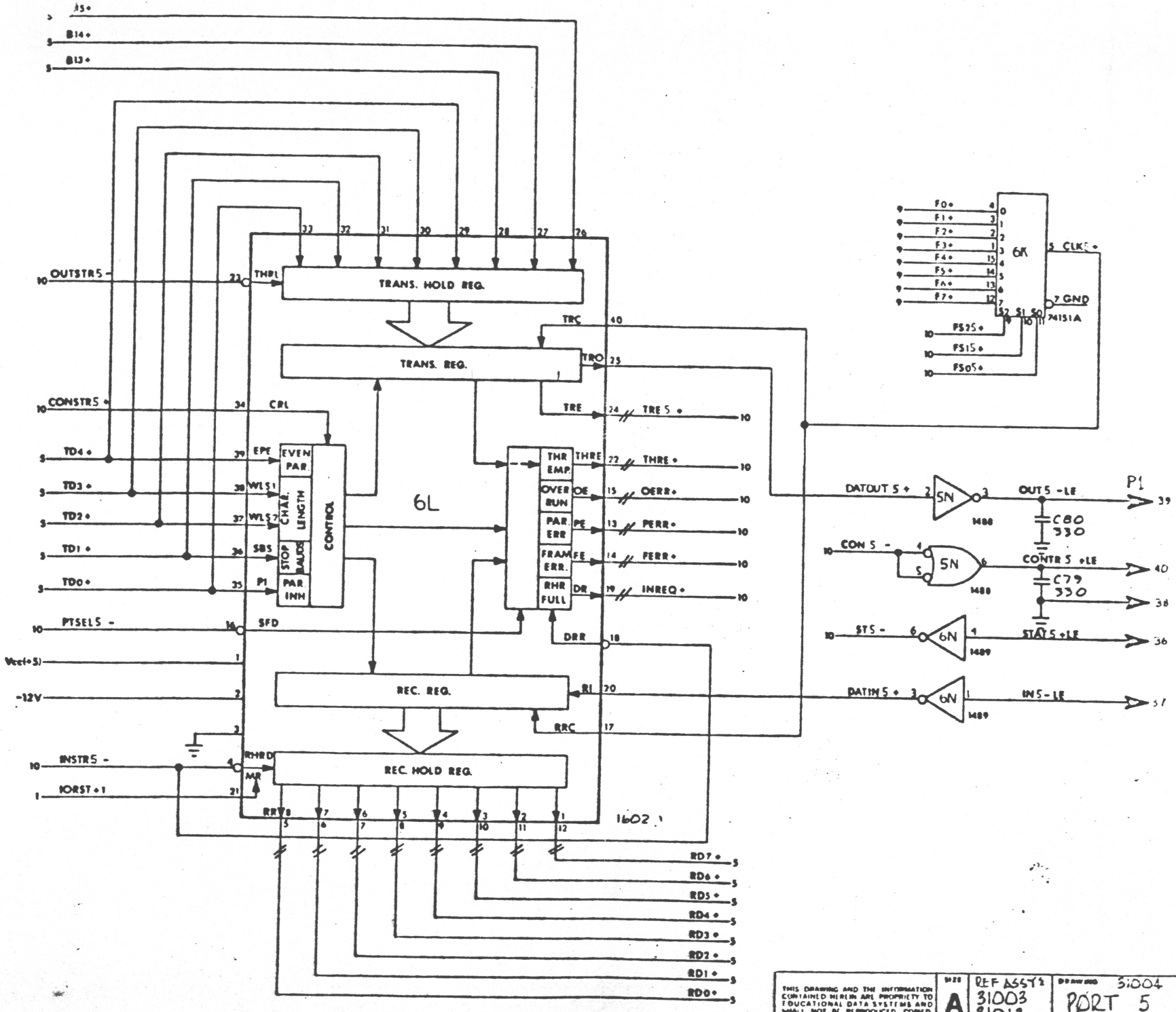

THIS DRAWING AND THE INFORMATION CONTAINED HEREIN ARE PROPRIETY TO EDUCATIONAL DATA SYSTEMS AND SHALL NOT BE REPRODUCED, COPIED, USED, OR DISCLOSED TO OTHERS WITH

SIZE	REF ASSY'S	DRAWING	REV
A	31003 31013	31004 PORT 5	B3

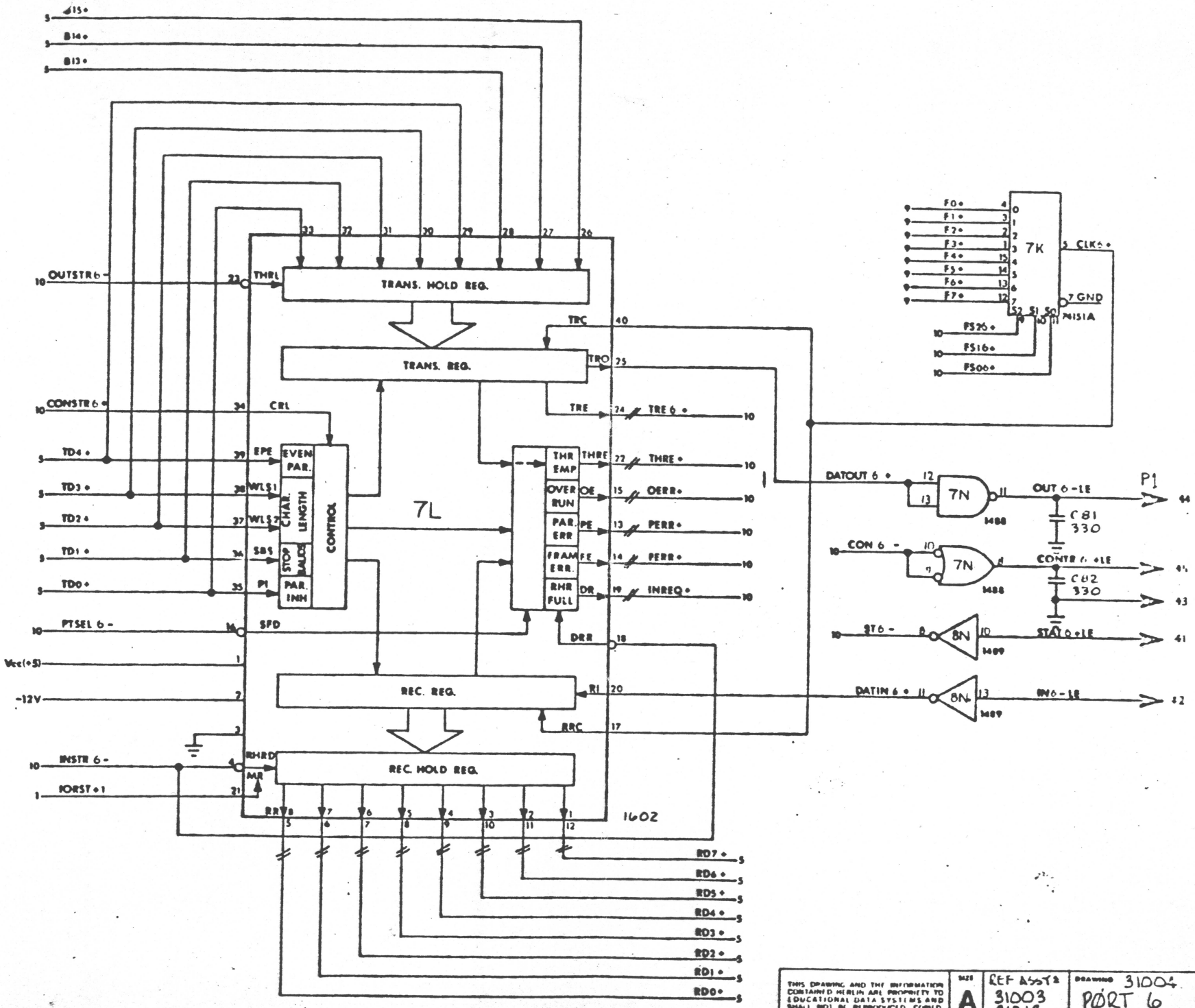

THIS DRAWING AND THE INFORMATION CONTAINED HEREIN ARE PROPERTY TO EDUCATIONAL DATA SYSTEMS AND SHALL NOT BE REPRODUCED, COPIED, USED, OR DISCLOSED TO OTHERS WITHOUT THE PRIOR WRITTEN CONSENT OF EDUCATIONAL DATA SYSTEMS

SIZE	REF ASSY'S	DRAWING	REV
A	31003 31013	31004 PØRT 6	B3

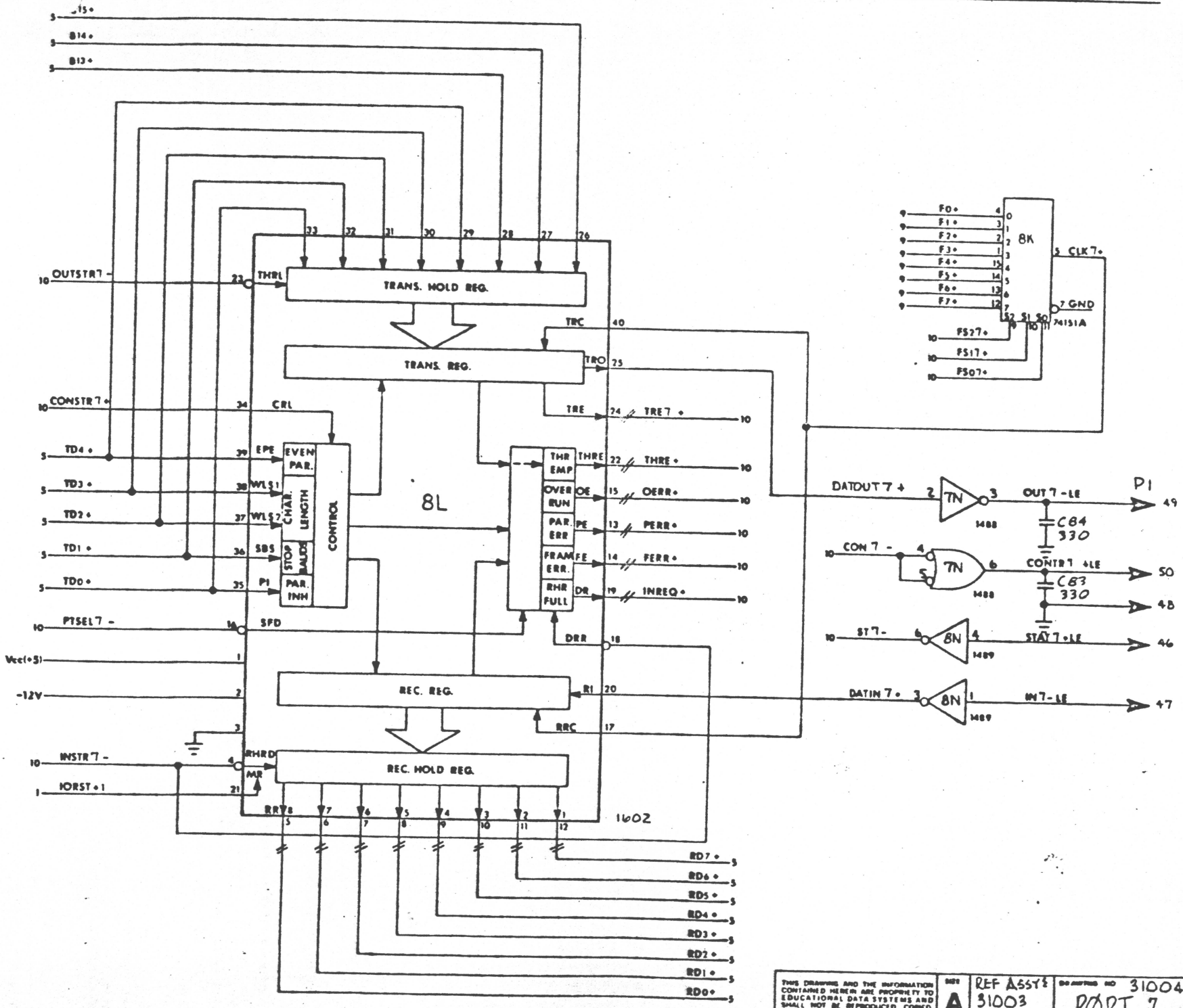

THIS DRAWING AND THE INFORMATION CONTAINED HEREIN ARE PROPRIETY TO EDUCATIONAL DATA SYSTEMS AND SHALL NOT BE REPRODUCED, COPIED,

SIZE	REF ASSY'S	DRAWING NO	REV
A	31003	31004 PART 7	B3