THIS DRAWING AND SPECIFICATIONS HEREIN ARE THE PROPERTY OF DATA GENERAL CORPORATION AND SHALL NOT BE REPRODUCED OR COPIED OR USED IN WHOLE OR IN PART AS THE BASIS FOR MANUFACTURE OR SALE OF ITEMS WITHOUT WRITTEN PERMISSION

REVISIONS				
REV	DESCRIPTION	DRFTG	APP BY	DATE
01	REDRAWN - ECO 5040	—	—	—
02	PER ECO 8073	[illegible]	[illegible]	11-29-76

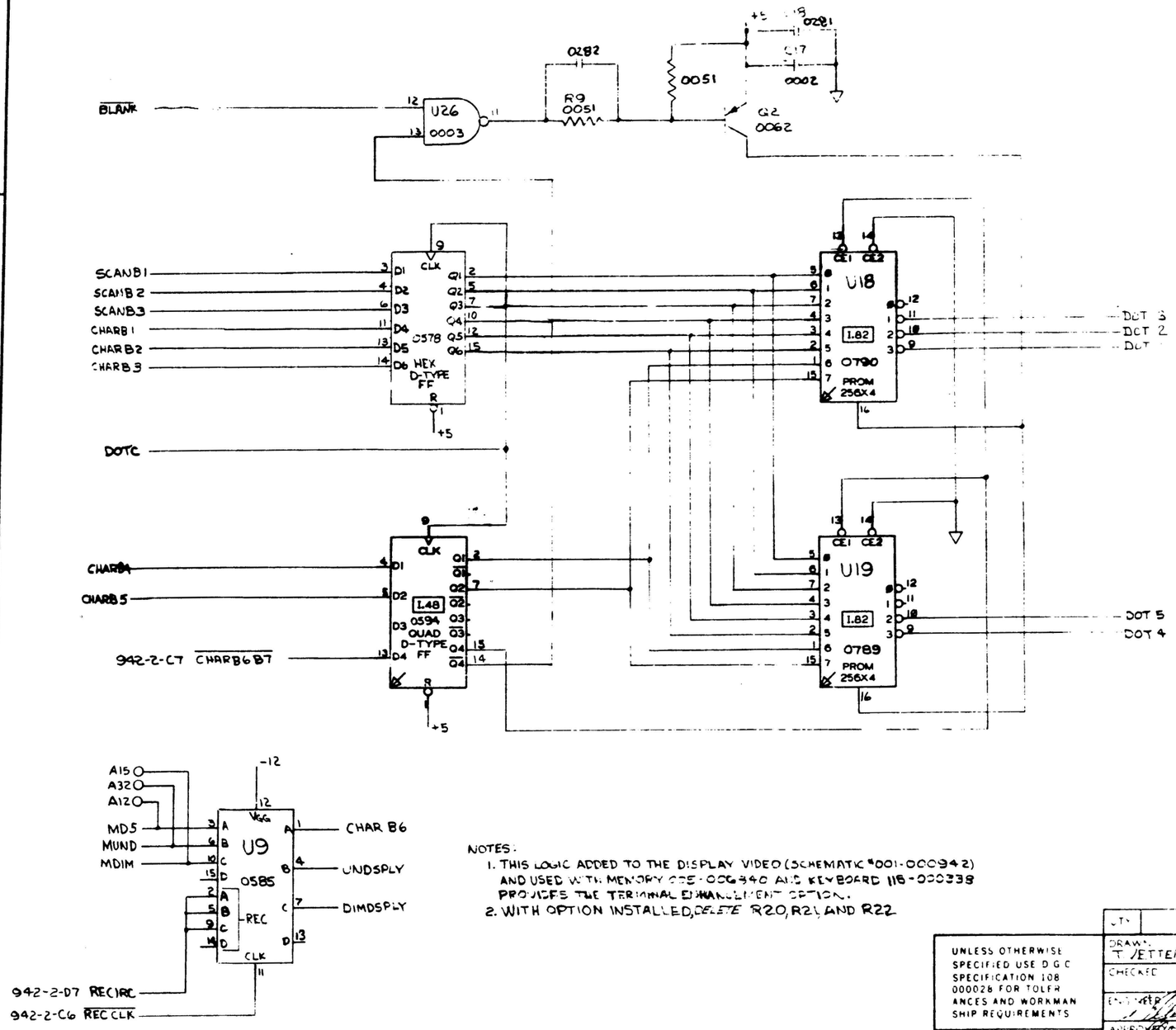

NOTES:
1. THIS LOGIC ADDED TO THE DISPLAY VIDEO (SCHEMATIC #001-000942) AND USED WITH MEMORY 005-006340 AND KEYBOARD 115-000338 PROVIDES THE TERMINAL ENHANCEMENT OPTION.
2. WITH OPTION INSTALLED, DELETE R20, R21, AND R22

QTY	DESCRIPTION	PART NO

UNLESS OTHERWISE SPECIFIED USE D G C SPECIFICATION 108 000028 FOR TOLERANCES AND WORKMANSHIP REQUIREMENTS

MATERIAL

FINISH

DRAWN T. VETTER 4/14/76
CHECKED
ENGINEER
APPROVED 4/14/76
FIRST USED ON
CALC

DATA GENERAL CORPORATION
SOUTHBORO MASSACHUSETTS 01772

TITLE
VIDEO OPTION
TERMINAL ENHANCEMENT

SIZE	CODE	DRAWING NUMBER	REV
C	01	001033	02

SHEET 1 OF 1

BRUNING 40526 20411