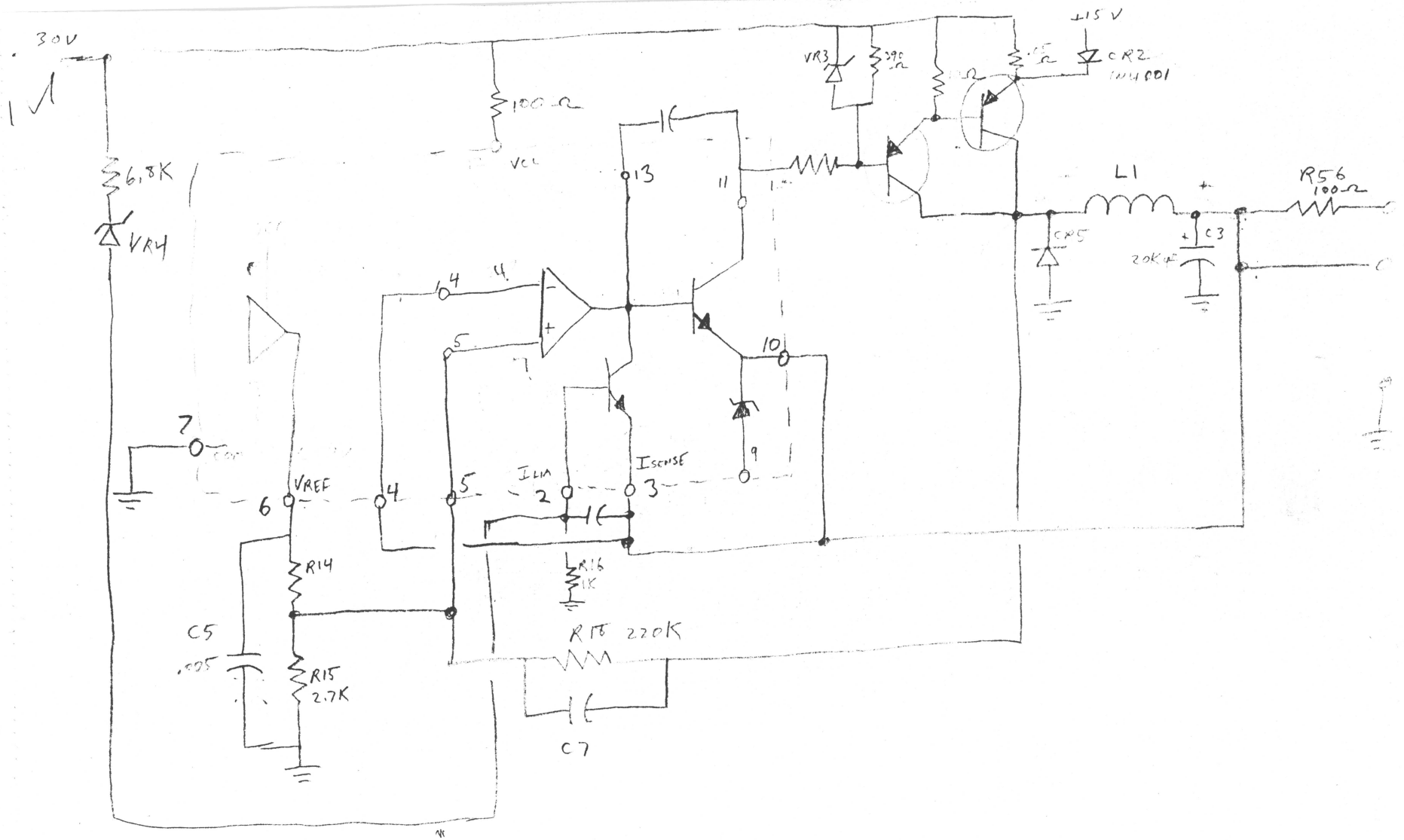

+5V

1210/1220 SUPPLY

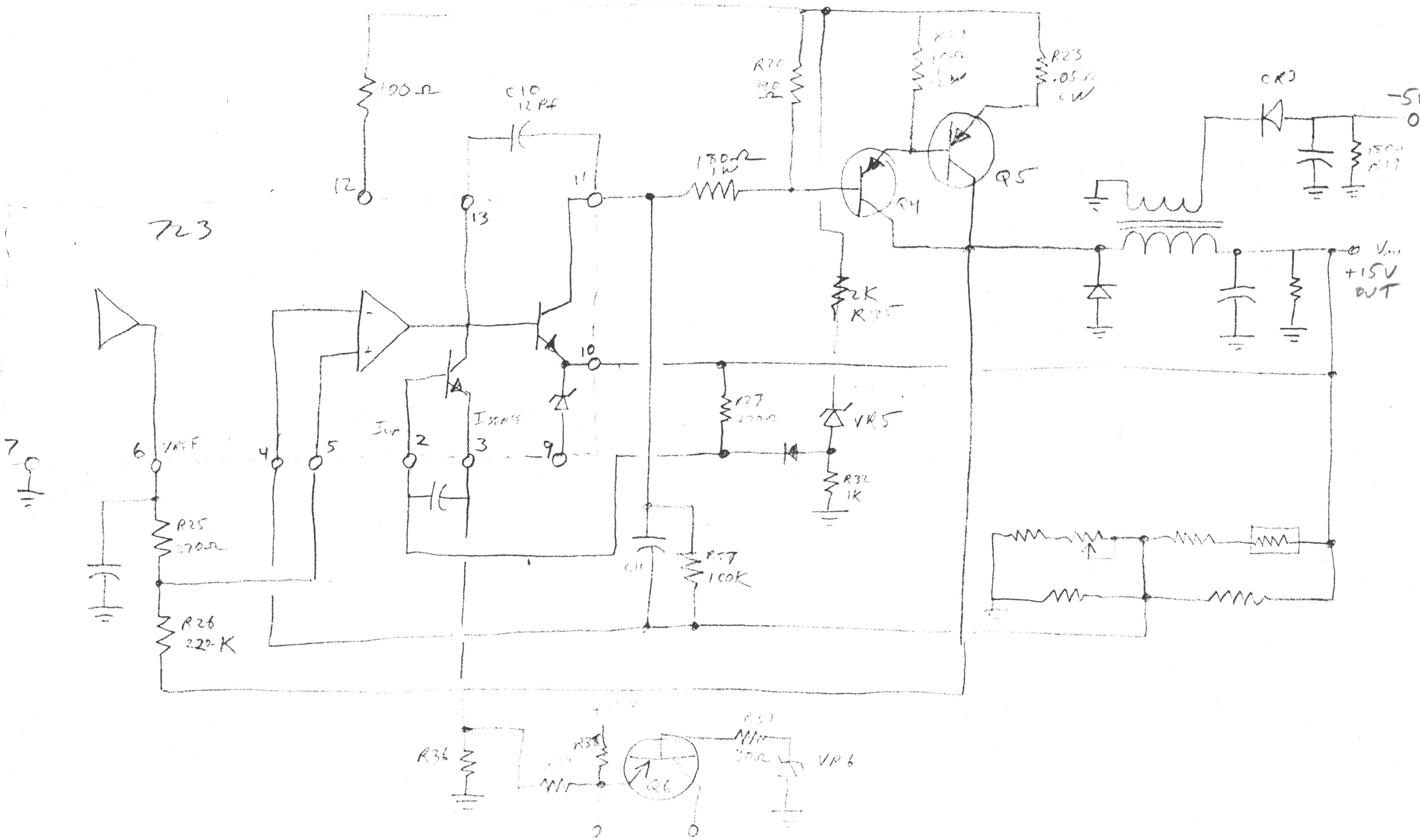

+15V

1210/1220