THIS DRAWING AND SPECIFICATIONS, HEREIN, ARE THE PROPERTY OF DATA GENERAL CORPORATION AND SHALL NOT BE REPRODUCED OR COPIED OR USED IN WHOLE OR IN PART AS THE BASIS FOR MANUFACTURE OR SALE OF ITEMS WITHOUT WRITTEN PERMISSION.

REVISIONS

REV.	DESCRIPTION	DR. FTG.	APP. BY	DATE
01	REVISED & REDRAWN	[illegible]		11-18-71
02	ECO # 801	[illegible]		3/72
03	ECO # 897	[illegible]		3/72
04	ECO # 1034	[illegible]		8/72
05	ECO # 1053	[illegible]		8/72
06	ECO # 1077	[illegible]		8/72
07	ECO # 1534	R.W.C.		5-16-75
08	ECO # 1717	R.W.C.		7-11-78

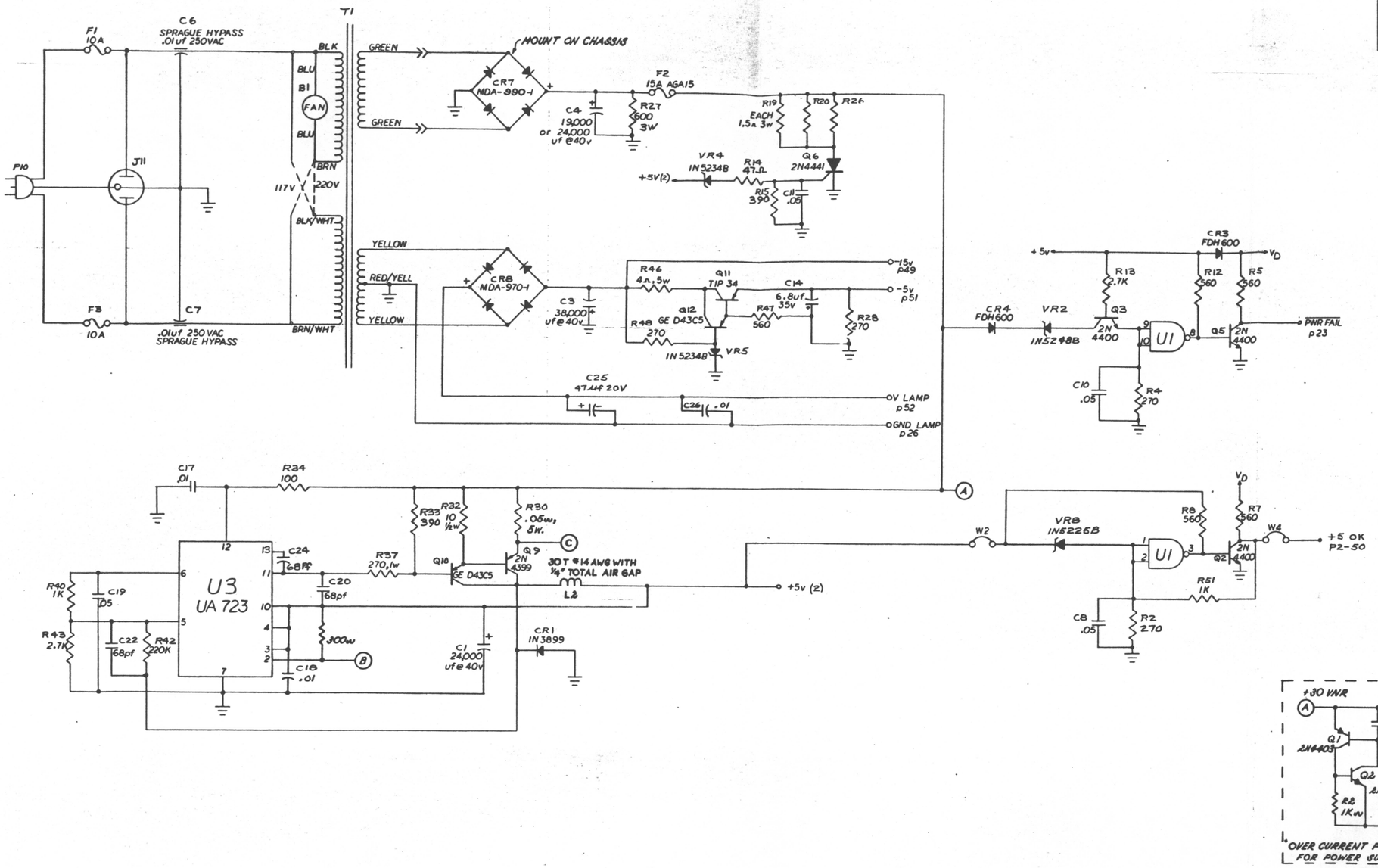

QTY.	DESCRIPTION	PART NO.

UNLESS OTHERWISE SPECIFIED— DIMENSIONS ARE IN INCHES TOLERANCES ON FRACTIONS ± DECIMALS .XX ± .XXX ± ANGLES ± PARTS TO BE FREE FROM BURRS BREAK ALL EDGES .010

UNLESS OTHERWISE SPECIFIED - ALL MACH. SURFACES ✓

MATERIAL

FINISH

DRAWN D.F. CRAFT 11-18-71

CHECKED

ENGINEER R. GRUNER 11-18-71

APPROVED

FIRST USED ON 2046

107-000079

SCALE

DATA GENERAL CORPORATION
SOUTHBORO, MASSACHUSETTS 01772

TITLE

800/1200 SINGLE +5 POWER SUPPLY

SIZE	CODE	DRAWING NUMBER	REV.
D	001	000149	08

SHEET 1 OF 1