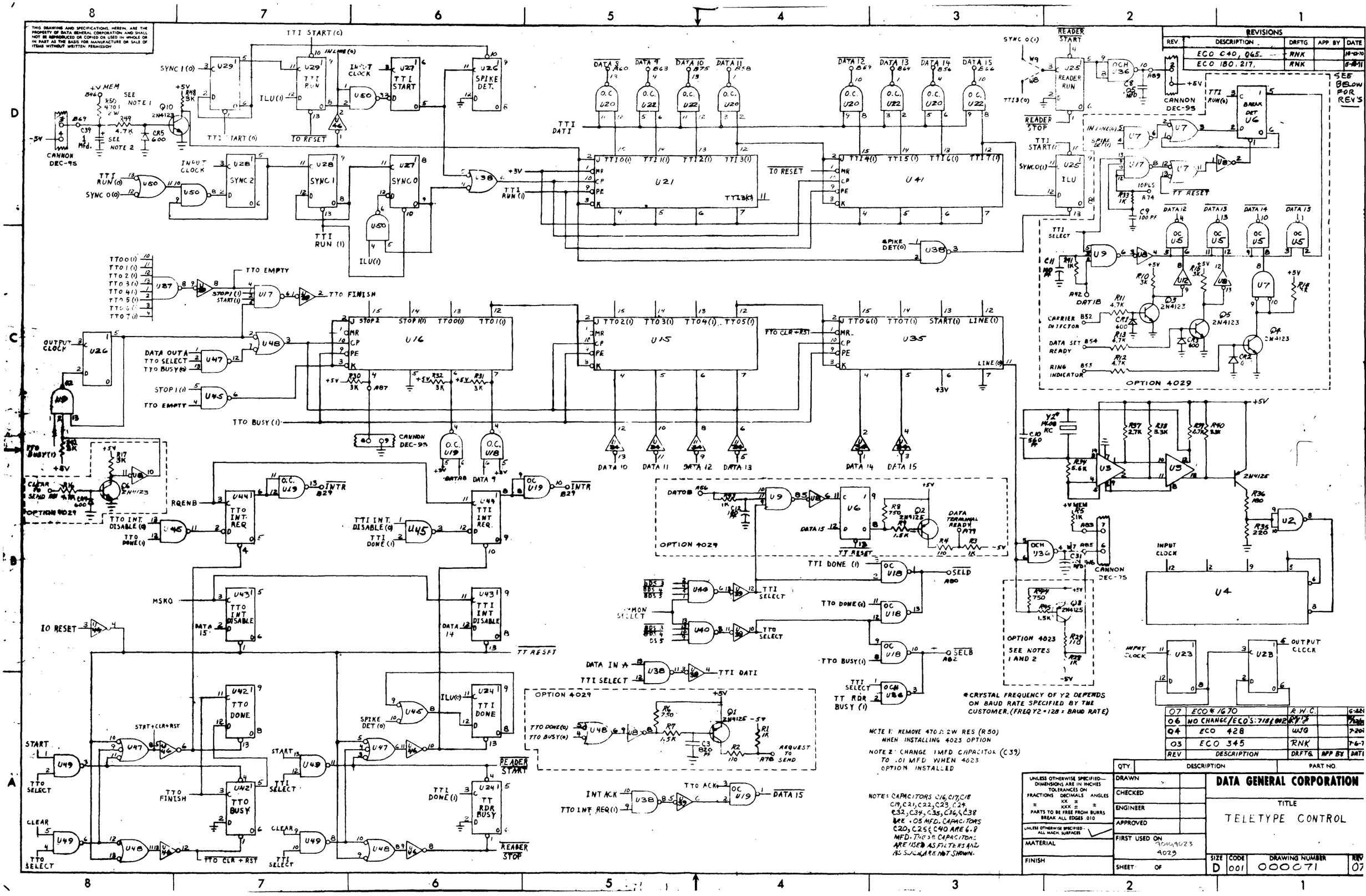

THIS DRAWING AND SPECIFICATIONS, HEREIN, ARE THE PROPERTY OF DATA GENERAL CORPORATION AND SHALL NOT BE REPRODUCED OR COPIED OR USED IN WHOLE OR IN PART AS THE BASIS FOR MANUFACTURE OR SALE OF ITEMS WITHOUT WRITTEN PERMISSION
REVISIONS
REV. DESCRIPTION DRFTG. APP. BY DATE
ECO C40, Q65 RNK
ECO 180, 217, RNK
SEE BELOW FOR REV'S
TTI START (0)
TTI RUN (0)
SYNC 1 (0)
SYNC 0 (0)
INPUT CLOCK
IO RESET
TTI DATI
TTI RUN (1)
TTO EMPTY
TTO FINISH
OUTPUT CLOCK
DATA OUT A
TTO SELECT
TTO BUSY (0)
STOP 1 (1)
TTO BUSY (1)
CANNON DEC-95
READER START
READER RUN
READER STOP
TTI START (0)
TTI RUN (0)
SYNC 0 (1)
TTI SELECT
TT RESET
SPIKE DET (0)
CARRIER DETECTOR
DATA SET READY
RING INDICATOR
OPTION 4029
OPTION 4023
SEE NOTES 1 AND 2
INPUT CLOCK
OUTPUT CLOCK
TTO INT. DISABLE (0)
TTO DONE (1)
TTI INT. DISABLE (0)
TTI DONE (1)
TTO INT. REQ
TTI INT. REQ
TTO INT DISABLE
TTI INT DISABLE
TTO DONE
TTO BUSY
TT RDR BUSY
START
CLEAR
TTO SELECT
TTO CLR + RST
READER START
READER STOP
DATA IN A
TTI SELECT
TTI DATI
TTO DONE (0)
TTO BUSY (0)
REQUEST TO SEND
INT ACK
TTO INT REQ (1)
TTO ACK
DATA 15
DATA TERMINAL READY
TTI DONE (1)
TTO DONE (0)
TTO BUSY (1)
TT RDR BUSY (1)
SELD
SELB
*CRYSTAL FREQUENCY OF Y2 DEPENDS ON BAUD RATE SPECIFIED BY THE CUSTOMER. (FREQ Y2 = 128 x BAUD RATE)
NOTE 1: REMOVE 470 Ω 2W RES (R50) WHEN INSTALLING 4023 OPTION
NOTE 2: CHANGE 1MFD CAPACITOR (C39) TO .01 MFD WHEN 4023 OPTION INSTALLED
NOTE: CAPACITORS C16, C17, C18, C19, C21, C22, C23, C24, C32, C34, C35, C36, & C38 ARE .05 MFD. CAPACITORS C20, C25 & C40 ARE 6.8 MFD. THESE CAPACITORS ARE USED AS FILTERS AND AS SUCH ARE NOT SHOWN.
07 ECO # 1670 R.W.C.
06 NO CHANGE/ECO'S: 718 & 802
04 ECO 428 WJG
03 ECO 345 RNK
REV DESCRIPTION DRFTG. APP BY DATE
QTY. DESCRIPTION PART NO.
UNLESS OTHERWISE SPECIFIED— DIMENSIONS ARE IN INCHES TOLERANCES ON FRACTIONS DECIMALS ANGLES ± XX ± XXX ± PARTS TO BE FREE FROM BURRS BREAK ALL EDGES .010
UNLESS OTHERWISE SPECIFIED ALL MACH. SURFACES
MATERIAL
FINISH
DRAWN
CHECKED
ENGINEER
APPROVED
FIRST USED ON 9010, 9023, 4029
SHEET OF
DATA GENERAL CORPORATION
TITLE
TELETYPE CONTROL
SIZE D CODE 001 DRAWING NUMBER 000071 REV 07